# 10

# Winter Wheat and Summer Maize Roots in Agro-Ecosystems on the North China Plain

*Fadong Li, Zhao Li, Yunfeng Qiao, Nong Zhu, Kun Du, Peifang Leng, and Shanbao Liu*

*Key Laboratory of Ecosystem Network Observation and Modeling, Institute of Geographic Sciences and Natural Resources Research, Chinese Academy of Sciences, Beijing, China; Shandong Yucheng Agro-ecosystem National Observation and Research Station, Ministry of Science and Technology, Yucheng, China; University of Chinese Academy of Sciences, Beijing, China*

## 10.1 Background

Food security is a considerable challenge (Cole et al. 2018; FAO 2017; FAO, IFAD, and WFP 2015) to realize the Sustainable Development Goals (SDGs) of the United Nations by 2030 (United Nations 2015). One of the most severe threats to food security is insufficient water resources (Grayson 2013), and this threat is being exacerbated continuously. Drought responses of crops, especially responses of roots, improve crop resilience against drought (Grayson 2013; Rey et al. 2017; Gupta et al. 2020).

North China Plain (NCP) supports food security in China (Godfray 2010; Piao et al. 2010; SCIO_PRC 2019) as one of the critical grain-producing areas; however, it is also one of the areas with scarce water resources (Jeong et al. 2014). The average annual precipitation is about 500 mm, but the annual water requirement of wheat and maize is more than 900 mm (Hu et al. 2010; Kendy et al. 2003; Wang et al. 2008). In addition, there is a mismatch between water resources and the distribution of population, which results in two critical water problems: (i) the drying up of the main course of the lower Yellow River reaches and (ii) eco-environmental degradation (Liu and Xia 2004). Due to its unique environment and food requirements, the water security and food security in NCP are particularly important. Therefore, the research on crop roots, soil nutrient utilization, soil structure, and water-use efficiency is essential to the growth and productivity of crops (Deng et al. 2006; Fan et al. 2011; Zhang et al. 2008). Studies have shown that the basis for ensuring high and stable crop yield is large biomass, and the biomass amount is closely related to the development of crop roots. In the crop models, sufficient rooting depth is defined as 1.5 m for winter wheat (Ouyang and Luo 2002) and 1.0 m for maize in NCP (Liu and Luo 2010), with roots located mainly in the upper 0.2–0.3 m (Mo and Liu 2001).

*The Root Systems in Sustainable Agricultural Intensification*, First Edition.
Edited by Zed Rengel and Ivica Djalovic.

The main objectives of this chapter were to present the crop root research in the NCP, to explore the mechanisms of root water uptake and various relevant nutritional and metabolic processes, and to characterize the improved water absorption and fertilizer utilization capacity of crop roots under the premise of constant (or a small increase) in allocation and consumption of photosynthetic products.

## 10.2 General Information on the Study Area

### 10.2.1 North China Plain (NCP)

The NCP is one of the three major plains in China. It is an essential part of the Great Plains in Eastern China (Figure 10.1). It is also known as the Huang-Huai-Hai Plain (meaning that the three main rivers: Huanghe (Yellow) River, Huaihe River, and Haihe River flow through this area), and has an area of 300 000 km$^2$. It has a flat terrain, convenient transportation, and numerous watercourses and lakes. It has been China's political, economic, and cultural centre since ancient times. Its population and cultivated land each account for about 20% of the whole country.

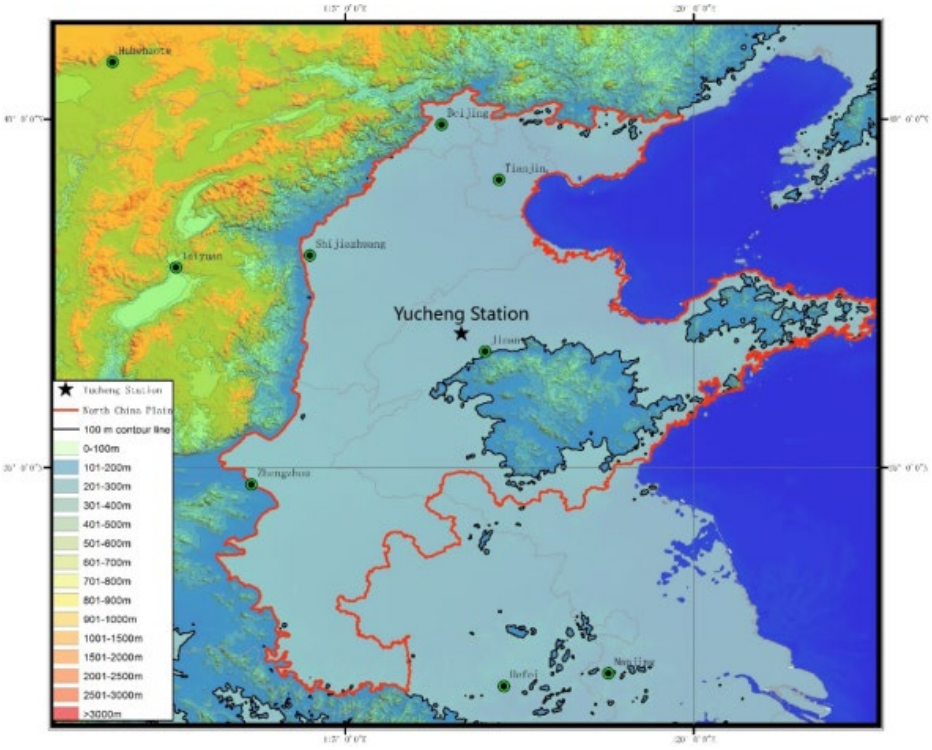


**Figure 10.1** Topographic map of the North China Plain. *Source:* Drawn by the authors using the DEM (Digital Elevation Model) data downloaded from: http://srtm.csi.cgiar.org/srtmdata/

**Table 10.1** The percentages of wheat, maize, and total grain production and the corresponding planted areas in the North China Plain as proportions of the China's totals.

| Year | Wheat grain production (%) | Wheat planting area (%) | Maize grain production (%) | Maize planting area (%) | Total grain production (%) |
|---|---|---|---|---|---|
| 2009 | 56 | 47 | 39 | 28 | 24 |
| 2010 | 56 | 47 | 36 | 28 | 24 |
| 2011 | 56 | 47 | 34 | 27 | 23 |
| 2012 | 56 | 48 | 32 | 27 | 23 |
| 2013 | 55 | 47 | 22 | 23 | 22 |
| 2014 | 55 | 47 | 22 | 22 | 21 |
| 2015 | 55 | 47 | 21 | 22 | 21 |
| 2016 | 54 | 47 | 21 | 22 | 21 |
| 2017 | 57 | 50 | 27 | 27 | 24 |

The fluvo-aquic soil is the most important cultivated soil type in the NCP. It has suitable tillage properties, is rich in mineral nutrients, and has a great potential in agricultural utilization. The NCP has warm, temperate monsoon climate with pronounced seasonal variations. The Huaihe River Basin in the south of NCP is a transition area to the subtropical zone, which has higher temperature and precipitation than areas in the north. The average annual temperature on the plain is 8–15 °C, with cold and dry winters.

The cropping systems are mostly double-crop rotation in one year and three crops in two years only in some parts of the northern area. The main food crops are wheat and maize. In the NCP, the wheat production and sown areas are about 55% and 47%, respectively, of the whole China, and those of maize were about 22.6% and 23.2%, respectively. The total grain production and sown area account for 21.8% and 20.4%, respectively, of the whole of China (Table 10.1).

### 10.2.2 Shandong Yucheng Agro-Ecosystem National Observation and Research Station (SYA-NORS)

Shandong Yucheng Agro-Ecosystem National Observation and Research Station (SYA-NORS), also called Yucheng Comprehensive Experiment Station (YCES), is one of more than 50 stations supported by the Ministry of Science and Technology, the P.R. of China, and is also one of stations of the Chinese Academy of Sciences; it is located in Dezhou (36°56′N, 116°40′E, 23 m a.s.l.), Shandong Province. It has a warm, temperate semiarid climate. The annual mean air temperature is 13.3 °C, and the annual precipitation is 560 mm according to the long-term observations in SYA-NORS (1980–2018). Precipitation is distributed unevenly, with 70% of the annual precipitation falling between June and September. The annual sunshine is 2640 hours. The soil type is aquents (poorly drained soils formed from human-transported material or on excavated landscapes) with high salinity (Tu and Li 2017).

The research direction of the SYA-NORS is aimed at the rational use of natural resources such as water, soil, and biology, and the sustainable development of the region. It concentrates on the mechanisms and models of energy cycling and conversion in the Earth's surface layer. Experimental research is carried out on development of spatial energy conversion methods; innovative measurement methods and improvement and development of instruments; combining the theories, methods, and means of geography, ecology, and agronomy in studying the structure and function of agro-ecosystems; and optimizing the management models and developing pilot demonstrations of supporting technologies.

## 10.3 Methods

Given the importance of the root systems and the need to understand them better, it is necessary first to develop the appropriate root system research methods to investigate root morphology and physiology. Ideally, researchers would like to use the simple, destructive, or, even better, non-destructive research methods to determine quickly, accurately, and quantitatively the morphological and physiological characteristics of crop roots. At present, due to a wide variety of research methods on roots and the significant differences in measuring methods, it is not easy to classify the existing root research methods accurately. Based on different research purposes and requirements, the crop root research methods can be divided into the following categories:

i) Direct sampling methods in the field, such as excavation, drilling, coring, sectioning, etc.
ii) Direct observation methods, such as root chambers, glass walls, rhizotron cameras, etc.
iii) Indirect observation methods, such as dyeing techniques, non-radioactive tracers, etc., and
iv) Other methods, such as using *in situ* containers, tube cultivation, micro root canal system observations, etc.

## 10.4 Root Research on Winter Wheat and Maize in the North China Plain: a Brief Overview

Wheat and maize are the main food crops in the NCP. Given the critical importance of the root systems, many studies have been conducted on wheat and maize roots in the NCP. The growth and development of above-ground biomass depend on the acquisition of soil nutrients and water by roots (Ju et al. 2015; Qi et al. 2012; Wang et al. 2014; Wheeler et al. 1993).

### 10.4.1 Wheat Root Studies

The characteristics of the crop production in NCP are a lack of water and excessive use of nitrogen fertilizers. Water-use efficiency and nitrogen fertilizer-use efficiency of winter wheat production must urgently be improved in the NCP. Recently, there have been many studies about the relationship between root systems and other factors, such as different irrigation and nitrogen regimes, tillage practices, and rhizosphere microbiome (Liu et al. 2018b).

The results showed that both the irrigation method and schedule influenced root development, the root distribution pattern down the soil profile, and the dynamics of root water uptake (Guo et al. 2018; Jha et al. 2017; Li et al. 2010; Liu et al. 2018a; Lv et al. 2009, 2015; Shao et al. 2009; Xu et al. 2016). Irrigation in the stem elongation stage resulted in high grain yield and water-use efficiency and offered a sound basis for developing the deficit irrigation regimes in north China (Shao et al. 2009).

The effects of different tillage practices (plough tillage, rotary tillage, and no-tillage) on root growth, water consumption characteristics, grain yield, water use, and water-use efficiency were evaluated under rain-fed conditions in a field with 20 years of rotary tillage history (Ali et al. 2018). Zhao et al. (2014) studied the effects of tillage (moldboard plough to a maximum depth of 15 cm, deep moldboard plough to a maximum depth of 30 cm, and chisel plough to a maximum depth of 30 cm) and crop residue management on soil respiration and its mechanisms in the NCP area. Compared with the moldboard plough + crop residue removed treatment, the root dry weight density of the deep moldboard plough + crop residue retained treatment and the chisel plough + crop residue removed treatment increased by 45% and 39%, respectively.

The rhizosphere harbours complex microbial communities, whose dynamic associations are considered critical for plant growth and health (De Vries et al. 2020). Distinct microbial co-occurrence patterns exist in the wheat rhizosphere, which could be associated with various agricultural ecosystem properties (Fan et al. 2018).

#### 10.4.1.1 Winter Wheat Root Distribution down the Soil Profile

Root length distribution changed with the growth stages (Figure 10.2) (Zhang et al. 2004b). Root length distribution in the upper 80 cm declined from 94% in the booting stage to 80% at maturity. The treatments with large amount of irrigation water had more roots than the treatments with less irrigation and the rain-fed treatments (Zhang et al. 2004b).

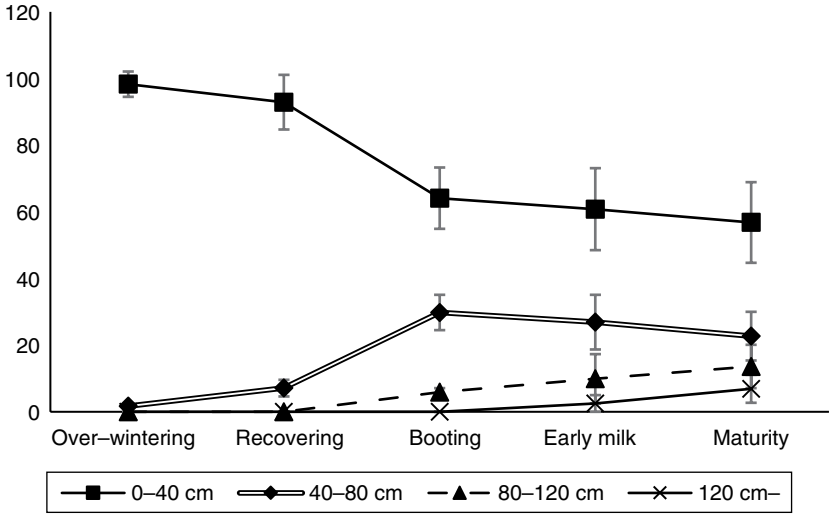


**Figure 10.2** Root length distribution (%) of winter wheat along the soil profile (0–40, 40–80, 80–120, and 120 cm and deeper) in the North China Plain. Means ± SE. *Source:* Data from Zhang et al. (2004b).

#### 10.4.1.2 Influence of Cropland Management on Winter Wheat Root Growth

Agronomic management influenced the distribution of winter wheat roots along the soil profile (Benjamin and Nielsen 2006; Zhang et al. 2004b). In particular, the irrigation methods altered root distribution (Lv et al. 2010; Phene et al. 1991; Proffitt et al. 1985). Wang et al. (2014) found that irrigation and nitrogen fertilization influence root growth and grain yield of winter wheat, with grain yield strongly correlated with root weight density (positively at 20–60 cm, but negatively in deep soil layers) in the Huanghuai wheat production area of China.

No significant difference in root length density of winter wheat was found between shallow and deep tillage (Zhang et al. 2004b). However, deep tillage was conducive to root growth in deeper soil layers (40–120 cm). Furthermore, more roots were found under the rows than between the rows (Zhang et al. 2004b) in the 0–20 cm layer. No significant difference was recorded in the other soil layers.

Winter wheat roots reached the 2.0 m depth (Zhou et al. 2008), with the maximum depth achieved at flowering. The $^{15}N$ isotope data showed that deep-rooted winter wheat could use soil nitrate up to 2.0 m depth. A significant decrease in nitrate content at the 1.4–2.0 m soil depth was observed at winter wheat maturity (Figure 10.3).

The research on nitrogen fertilization is often combined with irrigation. Wang et al. (2014) evaluated the effects of irrigation and nitrogen regimes on wheat root growth under high-yielding conditions in the Huanghuai wheat production area of China by performing field experiments at three locations in Henan Province. Liu et al. (2018b) investigated the effects of irrigation and N regimes on root development and their relationship with soil water and N use in different soil layers.

### 10.4.2 Maize Root Studies

Another critical food crop in the NCP is maize. There have been many studies on the maize root systems in the recent years, including grain productivity, nitrate leaching, soil water, and soil N content. The effective and modern cultivation model for high maize productivity

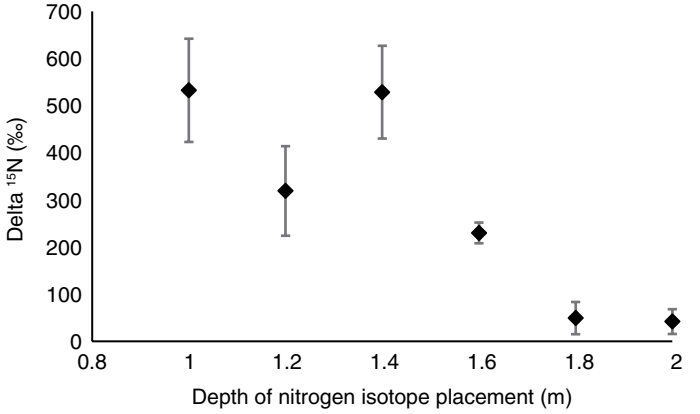


**Figure 10.3** $^{15}N$ in winter wheat grain from the tracer placed at six soil depths. Means ± SE. *Source:* Data from Zhou et al. (2008)

in the semiarid areas is plastic film mulching that enhanced ear and grain properties, and root spatial and temporal distribution down the soil profile, resulting in increased grain yields and reduced productivity risks in dryland farming systems (Jia et al. 2018).

Nitrate that leached below the maize root zone was still available to deep-rooted wheat in the summer maize-winter wheat rotation in the NCP (Zhou et al. 2008). Overuse of inorganic N fertilizers and high net mineralization and nitrification, together with a predominance of rainfall in the summer season and light soil texture, are the main controlling factors responsible for a high nitrate leaching loss in this soil-crop-climate system (Huang et al. 2017).

Root length density of fine roots (diameter <0.2 mm) in the 0–20 cm soil layer was significantly and positively correlated with soil water content and negatively with soil mineral N content. The root length density of fine roots, as well as roots with the diameter >0.4 mm in the 20–60 cm soil layer, was positively correlated with shoot N uptake (Zhang et al. 2018).

#### 10.4.2.1 Summer Maize Root Distribution along the Soil Profile

Figure 10.4 shows the root dry weight density and distribution down the soil profile. Compared with the roots of winter wheat, the summer maize roots were distributed mainly in the shallow layer, with more than 90% growing at 0–40 cm depth (Zhou et al. 2008).

Usually, maize root dry weight reaches a maximum at the tasseling (VT) stage (Figure 10.5) (Qi et al. 2012). For the two most popular maize genotypes, the maximum root dry weight of DH661 was 35.2 and 34.5 g plant$^{-1}$ in 2009 and 2010, respectively, and that of ZD958 was 19.2 and 18.8 g plant$^{-1}$ in 2009 and 2010, respectively (Qi et al. 2012).

#### 10.4.2.2 Influence of Cropland Management on Summer Maize Root Growth

The summer maize roots grew up to 1.2 m soil depth (Zhou et al. 2008), reaching the maximum depth at silking. Maize root length density varied in different growing stages (Figure 10.6) (Ren et al. 2018).

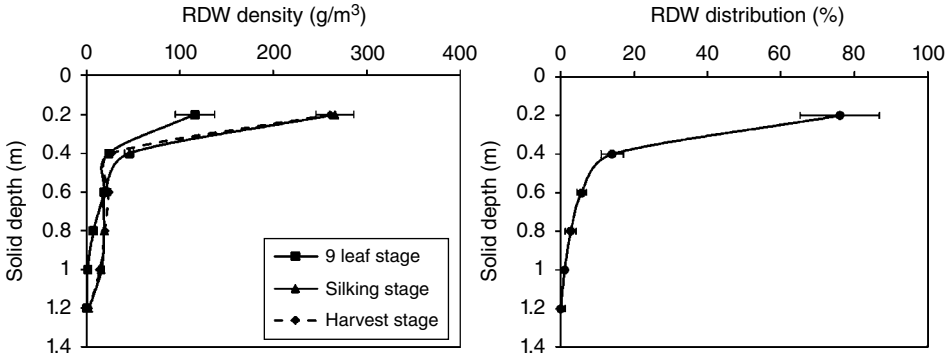


**Figure 10.4** Root dry weight (RDW) density at three growth stages and the relative RDW distribution at harvest of summer maize in the North China Plain. Means ± SE. *Source:* Data from Zhou et al. (2008).

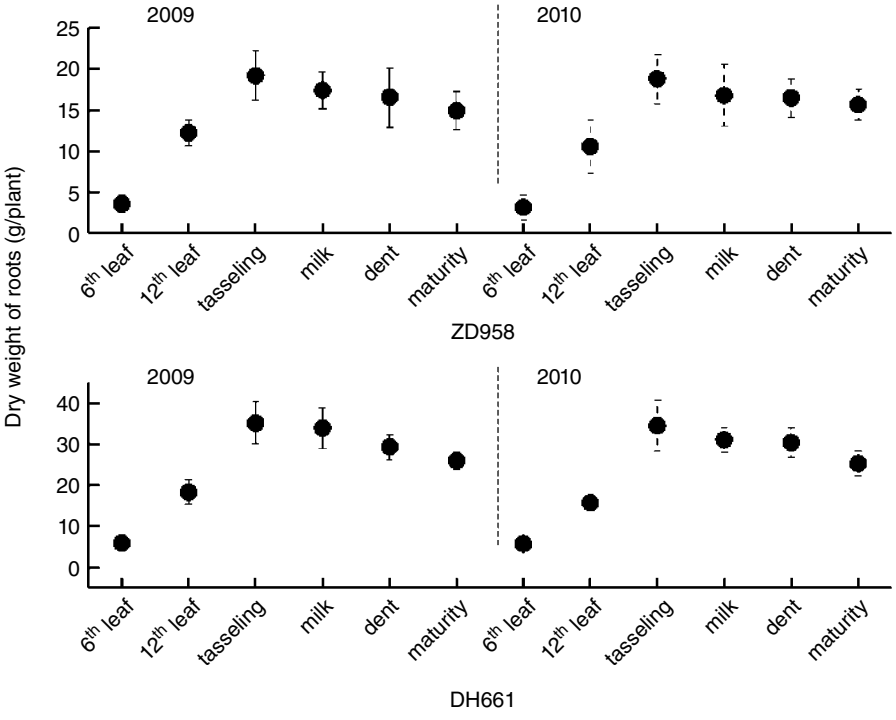


**Figure 10.5** Variation in root dry weight of two maize genotypes (ZD958 and DH661) at various growing stages in the North China Plain in 2009 and 2010. Means ± SE. *Source:* Data from Qi et al. (2012).

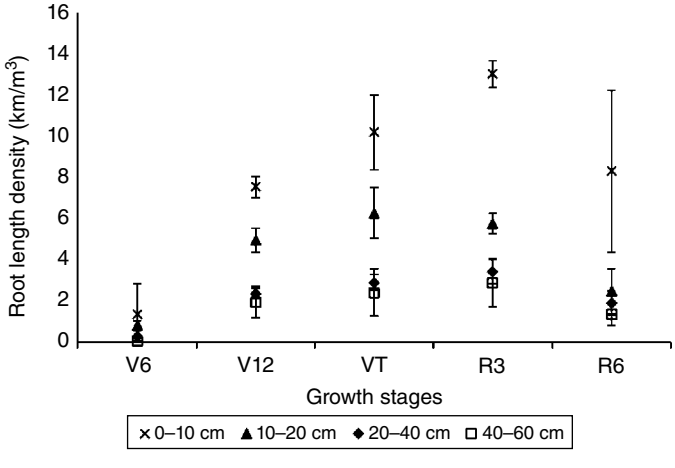


**Figure 10.6** Maize root length density at various soil depths and in various growth stages: V6 (6th leaf), V12 (12th leaf), VT (tasseling), R3 (milk), and R6 (physiological maturity). Means ± SE. *Source:* Modified from Ren et al. (2018).

In the NCP, one reason for the wheat-maize rotation system being popular is that the nitrate leached during the winter wheat season remained in the maize root zone, maintaining relatively high nitrate content without N fertilization for the maize season.

## 10.5 Relationship Between Roots, Water Use, and Crop Yield

### 10.5.1 Wheat

The current research on crop roots in the NCP is mainly through the combination of field experiments and stable isotope techniques to explore the relationship between plant roots and rhizosphere microorganisms, irrigation methods, water-use efficiency, and nitrogen utilization. After decades of research, it has been proposed to enhance crop growth and yield by promoting the growth of roots.

At the SYA-NORS, located in the NCP, we have accomplished a substantial body of work on wheat and maize root systems. Zhao et al. (2018) evaluated water uptake models (Molz–Remson model, Selim–Iskandar model, and Feddes model) by using the precise field observation data. The hydrogen and oxygen stable isotopes revealed dynamic characteristics of soil water absorption by roots of winter wheat and summer maize during the whole growth period.

We have done long-term observations of the root system in the field trials to collect data on roots, grain yield, meteorological parameters, and soil-related indicators in the 2009–2014 period, monitoring wheat and maize root density three times each year. In the wheat growth period, we chose the stages of stem elongation (March), booting (April), and grain ripening (May and June). In the maize growth period, we chose the stages of seedling growth (July), stem elongation (August), and grain ripening (September). Figure 10.7 shows the root density of wheat in five years (2009–2010 and 2012–2014), with clear differences in both intra- and inter-season variability.

The data on wheat root density and production were shown in Table 10.2. We studied the potential relationship between production and root density during three periods of wheat. The results showed that the maximum root density at grain ripening was 341 $g\,m^{-3}$, and the period of intensive growth of wheat roots was mainly in the stem elongation to booting stages (Table 10.2). The irrigation in this period of intensive root growth was a significant factor in enhancing wheat growth.

Figure 10.8 shows the relationships between wheat root density and grain yield in the 5-year period (see Table 10.2). The rainfall in 2010 was higher than in the other years; hence, the 2010 data were excluded in Figure 10.8a. There was an obvious relationship between wheat root density (at stem elongation and ripening) and grain yield (Figure 10.8a,c). However, there was no correlation between grain production and the root density at booting (Figure 10.8b).

The positive relationship between wheat root density and yield at ripening (Figure 10.8c) was similar to that in the other studies (Ehdaie et al. 2011; Liu et al. 2018a). The results further indicated that the optimization of wheat root density would increase the final yield of wheat. In addition, other relevant studies have also shown that, under experimental

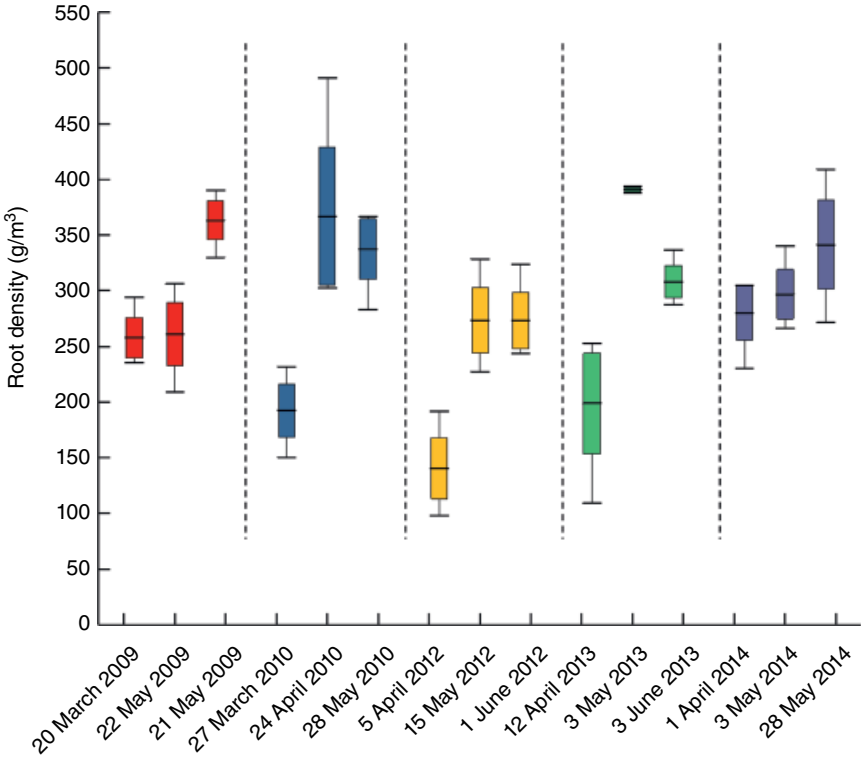


**Figure 10.7** The root density of wheat in the top 1 m of soil during five growing seasons on the North China Plain. The central line in each box represents the mean value.

**Table 10.2** Wheat root system density in the top 1 m of soil and grain yield in five seasons on the North China Plain.

| Sampling time | Root density ($g\,m^{-3}$) | Grain yield ($t\,ha^{-1}$) |
|---|---|---|
| 20 March 2009 | 258 ± 32 | 6.8 ± 0.29 |
| 22 April 2009 | 261 ± 49 | |
| 21 May 2009 | 363 ± 31 | |
| 27 March 2010 | 192 ± 18 | 6.9 ± 0.82 |
| 24 April 2010 | 367 ± 108 | |
| 28 May 2010 | 337 ± 47 | |
| 5 April 2012 | 140 ± 47 | 6.3 ± 0.58 |
| 15 May 2012 | 274 ± 51 | |
| 1 June 2012 | 273 ± 44 | |
| 12 April 2013 | 199 ± 78 | 6.4 ± 0.51 |
| 3 May 2013 | 391 ± 3 | |
| 3 June 2013 | 308 ± 25 | |
| 1 April 2014 | 280 ± 43 | 7.3 ± 0.38 |
| 3 May 2014 | 297 ± 39 | |
| 28 May 2014 | 341 ± 69 | |

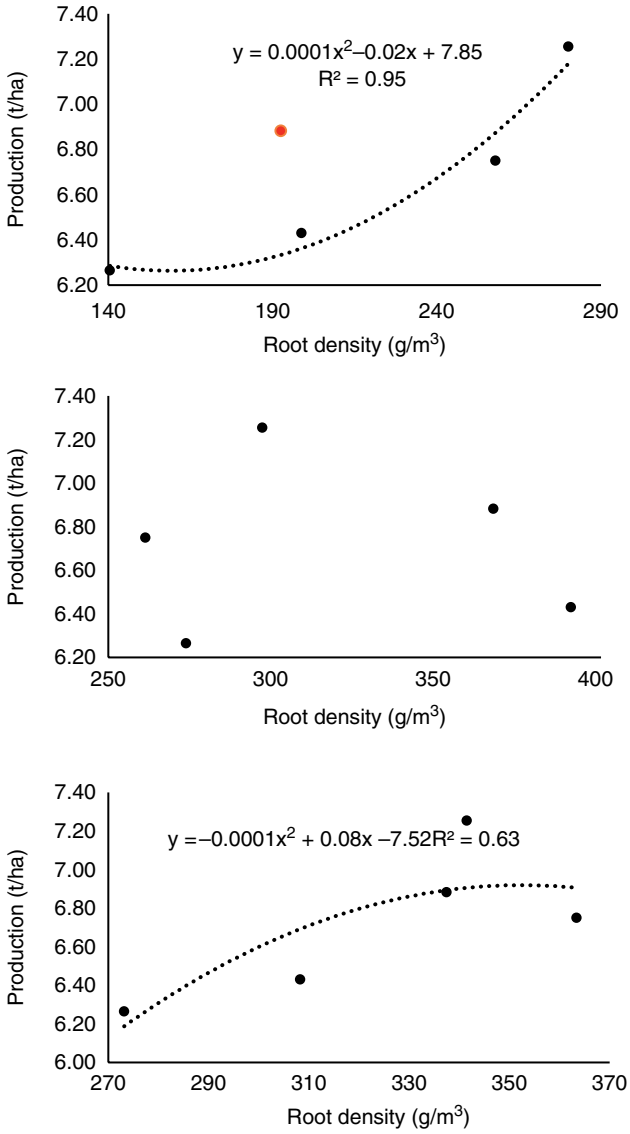


**Figure 10.8** Wheat roots density in the top 1 m of soil in various growth stages and grain production on North China Plain over a 5-year period. (a) at stem elongation; (b) at booting; and (c) at grain ripening. The light-grey symbol in (a) was an outlier and was excluded from the analysis.

conditions, rational application of fertilizers and irrigation can improve water-use efficiency and soil N-use efficiency by optimizing root density of wheat (Man et al. 2016; Plett et al. 2020).

Effects of irrigation on wheat root system have been a research focus on the NCP for many years. Wheat in the rain-fed treatment and the irrigated treatment (with a few irrigation events) tended to have relatively greater root density in deeper layers of soil than the highly irrigated treatments. In the topsoil layer, this trend was reversed (Zhang et al. 2004b), with wheat in the non-irrigated treatment and the treatment with a few irrigation events

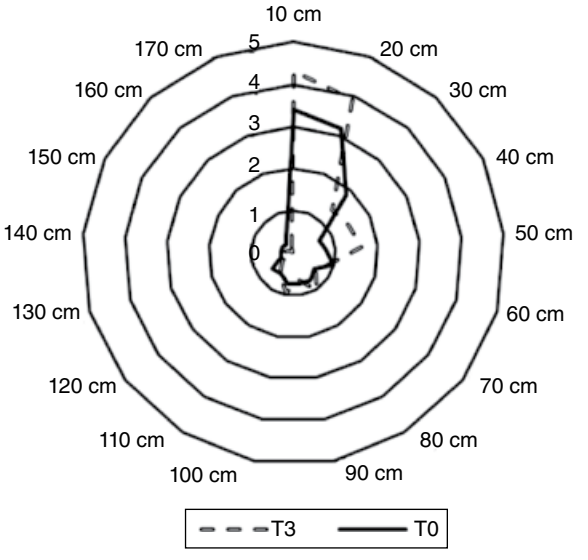


**Figure 10.9** Distribution of root length density down the soil profile depth (in cm) at maturity for rain-fed (T0) and irrigated winter wheat (T3; three irrigation events at 60 mm water each). *Source:* Data from Zhang et al. (2004b).

having lower root density than in the more frequently irrigated treatments. At grain ripening, wheat root length density below 140 cm was higher in the rain-fed treatment (T0) than the treatment receiving three irrigations (T3) (Figure 10.9). In contrast, in the topsoil layer, the latter had a higher root length density than the former.

In the field trials at the Yucheng Comprehensive Experimental Station, in order to assess relative root growth, rate of biomass increase, and grain yield, we designed a range of treatments in which soil water contents were kept at 80%, 65%, and 50% of the field capacity by applying irrigation at depths of 0, 30, 50, and 100 cm (Li et al. 2002). The results showed that the 0–30 cm soil layer had a larger wheat root length density when a smaller amount of water was supplied (Figure 10.10a), suggesting the adaptive plant responses to increasing root absorptive capacity. In addition, the distribution of wheat roots was related to the type of irrigation, with surface irrigation associated with roots being mainly in the topsoil and root length density decreasing exponentially with the soil depth (Figure 10.10b).

When deep irrigation was applied, wheat root length density in the top 20 cm of soil was low, and root growth in deeper layers was stimulated compared with the surface irrigation (Figure 10.10b). Hence, manipulating water supply can change root distribution density down the soil profile.

To quantify the effects of shallow water tables on the distribution of root dry weight density of winter wheat at the Yucheng Comprehensive Experimental Station, we set a field trial under rain-fed conditions with lysimeters and water table at different depths (40, 70, 110, or 150 cm) (Liu and Luo 2011). Figure 10.11 shows the distribution of wheat root dry weight density in the soil profile at harvest in the treatments with different groundwater table depths in 2010. The root dry weight within 0–100 cm layer ranged from 55 to 185 g $m^{-3}$ and increased with an increase in the groundwater table depth. The groundwater table at 150 cm was associated with the largest root dry matter weight, having 238% more root dry matter compared with the groundwater table at 40 cm depth.

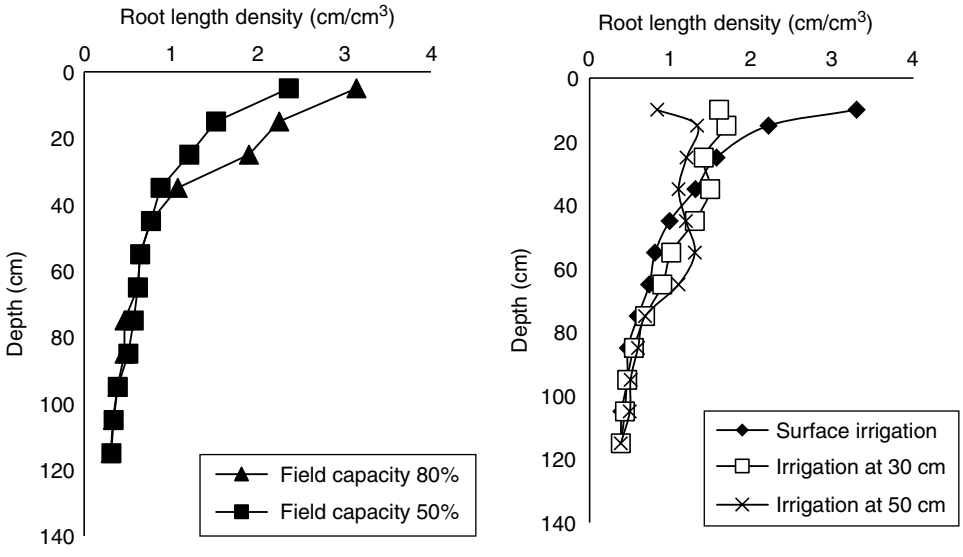


**Figure 10.10** Distribution of wheat root length density down the soil profile as influenced by differential water availability and the irrigation type. (a) surface irrigation; (b) water content = 80% of field capacity supplied by three types of irrigation. *Source:* Data from Li et al. (2002).

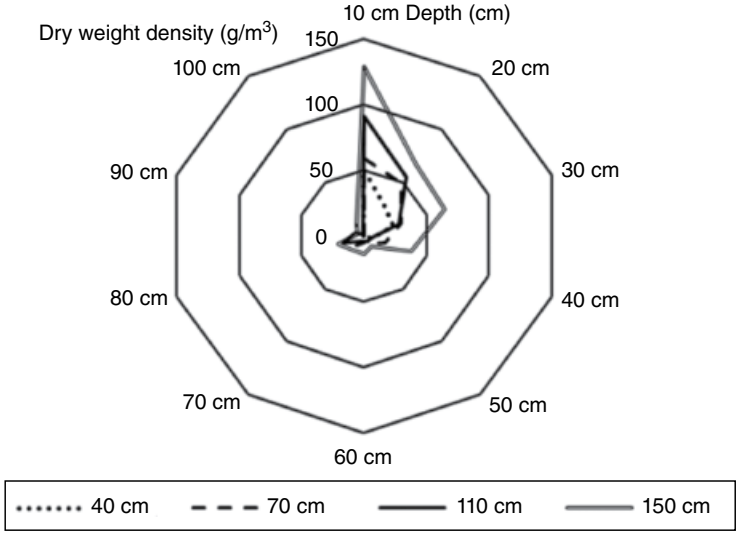


**Figure 10.11** Distribution of wheat root dry weight density in the soil profile at harvest as dependent on the water table depths (40, 70, 110, or 150 cm). *Source:* Data from Liu and Luo (2011)

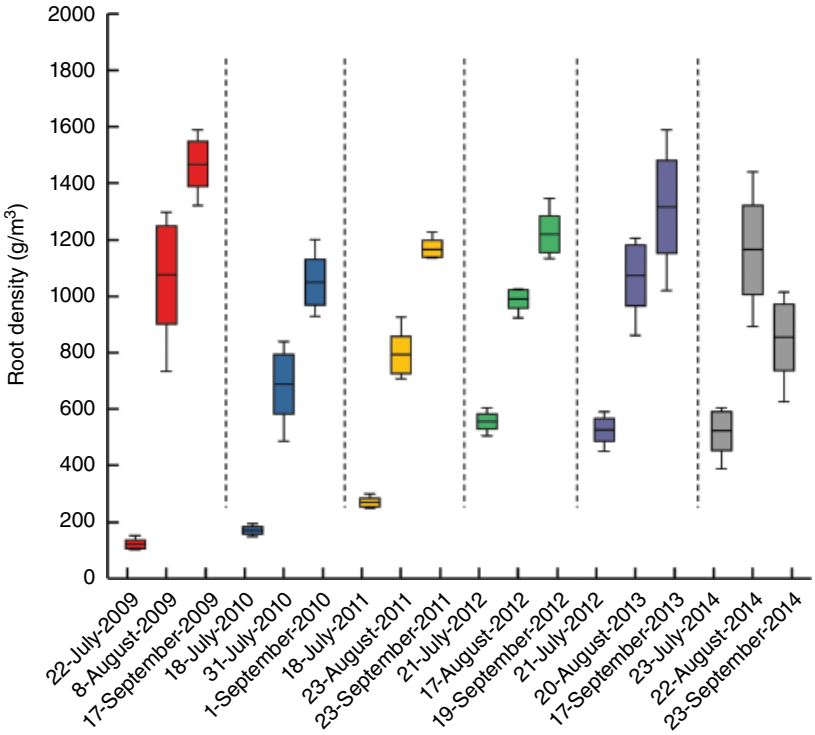


**Figure 10.12** The intra- and inter-seasonal variability in maize root density over the 5-year period.

### 10.5.2 Maize

Across the five field trials, maize roots grew until the grain ripening stage (Figure 10.12), with the maximum root density of 1317 g m$^{-3}$. The irrigation was supplied only at sowing.

In the same trials over the five seasons, maize grain yield ranged from 7.4 to 9.7 t ha$^{-1}$ (Table 10.3).

## 10.6 Conclusions

The NCP represents the critical food production area (winter wheat-summer maize cropping) with scarce water resources. Understanding temporal and spatial dynamics of wheat and maize root growth is an essential factor in achieving efficient use of water ad nutrient resources to ensure food security. The main growth period of wheat roots was in the stem elongation and booting stages, whereas the maize roots had a longer growth period extending all the way to grain ripening.

Given that root density was positively correlated with grain yield, it was suggested that increases in root biomass could be linked to an enhanced nutrient and water absorption. The distribution of root density along the soil profile plays a critical role in soil water

**Table 10.3** Maize root system density and grain yield over five seasons on the North China Plain.

| Sampling time | Root density ($g\,m^{-3}$) | Grain yield ($t\,ha^{-1}$) |
|---|---|---|
| 22 July 2009 | 1214 ± 263 | 9.1 ± 0.73 |
| 8 August 2009 | 1468 ± 136 | |
| 17 September 2009 | 1246 ± 300 | |
| 18 July 2010 | 170 ± 24 | 7.4 ± 0.37 |
| 31 July 2010 | 688 ± 182 | |
| 1 September 2010 | 973 ± 139 | |
| 25 September 2010 | 717 ± 117 | |
| 18 July 2011 | 269 ± 27 | – |
| 23 August 2011 | 792 ± 117 | |
| 23 September 2011 | 1166 ± 51 | |
| 21 July 2012 | 556 ± 49 | 9.7 ± 0.91 |
| 17 August 2012 | 1218 ± 112 | |
| 19 September 2012 | 989 ± 57 | |
| 21 July 2013 | 525 ± 70 | – |
| 20 August 2013 | 1074 ± 186 | |
| 17 September 2013 | 1317 ± 286 | |
| 23 July 2014 | 522 ± 118 | 9.7 ± 2.05 |
| 22 August 2014 | 1165 ± 273 | |
| 23 September 2014 | 854 ± 203 | |

utilization. The findings suggested that optimization of the root system contributed to increased grain yield.

We suggest that the future research should focus on the interactions between crop roots and irrigation, climate, crop genotype, fertilizer application, and root-associated soil microbiome to develop and utilize a water-soil-crop-energy flow model suited for the crops grown on the NCP. This model is likely to contribute to food security, environmental safety, economic development, and the sustainable intensification of agricultural production on the NCP.

Funding: This research was funded by the National Natural Science Foundation of China (No. 41771292, No. U1906219, No. 31170414), National Natural Science Foundation of China, and United Nations Environment Programme (No. 41761144053).

## References

Ali, S., Xu, Y., Ahmad, I. et al. (2018). Tillage and deficit irrigation strategies to improve winter wheat production through regulating root development under simulated rainfall conditions. *Agricultural Water Management* 209: 44–54.

Benjamin, J.G. and Nielsen, D.C. (2006). Water deficit effects on root distribution of soybean, field pea and chickpea. *Field Crops Research* 97: 248–253.

Cole, M.B., Augustin, M.A., Robertson, M.J. et al. (2018). The science of food security. *Science of Food* 2: 14.

Deng, X., Lun, S., Zhang, H. et al. (2006). Improving agricultural water use efficiency in arid and semiarid areas of China. *Agricultural Water Management* 80: 23–40.

Ehdaie, B., Layne, A., and Waines, J. (2011). Root system plasticity to drought influences grain yield in bread wheat. *Euphytica* 186: 219–232.

Fan, M., Shen, J., Yuan, L. et al. (2011). Improving crop productivity and resource use efficiency to ensure food security and environmental quality in China. *Journal of Experimental Botany* 63: 13–24.

Fan, K., Weisenhorn, P., Gilbert, J.A. et al. (2018). Wheat rhizosphere harbors a less complex and more stable microbial co-occurrence pattern than bulk soil. *Soil Biology and Biochemistry* 125: 251–260.

FAO (2017). The Future of Food and Agriculture—Trends and Challenges. Rome, Italy: Food and Agriculture Organization of the United Nations.

FAO, IFAD and WFP (2015). The state of food Insecurity in the world 2015. Meeting the 2015 international hunger targets: taking stock of uneven progress. Rome, Italy.

Godfray, H.C.J. (2010). Food security: the challenge of feeding 9 billion people. *Science* 327: 812–818.

Grayson, M. (2013). Agriculture and drought. *Nature* 501: S1.

Guo, X., Sun, X., Ma, J. et al. (2018). Simulation of the water dynamics and root water uptake of winter wheat in irrigation at different soil depths. *Water* 10: 1033.

Gupta, A., Rico Medina, A., and Caño Delgado, A.I. (2020). The physiology of plant responses to drought. *Science* 368: 266.

Hu, Y., Moiwo, J.P., Yang, Y. et al. (2010). Agricultural water-saving and sustainable groundwater management in Shijiazhuang Irrigation District, North China Plain. *Journal of Hydrology* 393: 219–232.

Huang, T., Ju, X., and Yang, H. (2017). Nitrate leaching in a winter wheat-summer maize rotation on a calcareous soil as affected by nitrogen and straw management. *Scientific Reports* 7: 42247–42247.

Jeong, S.-J., Ho, C., Piao, S. et al. (2014). Effects of double cropping on summer climate of the North China Plain and neighbouring regions. *Nature Climate Change* 4: 615–619.

Jha, S.K., Gao, Y., Liu, H. et al. (2017). Root development and water uptake in winter wheat under different irrigation methods and scheduling for North China. *Agricultural Water Management* 182: 139–150.

Jia, Q., Chen, K., Chen, Y. et al. (2018). Mulch covered ridges affect grain yield of maize through regulating root growth and root-bleeding sap under simulated rainfall conditions. *Soil and Tillage Research* 175: 101–111.

Ju, C., Buresh, R.J., Wang, Z. et al. (2015). Root and shoot traits for rice varieties with higher grain yield and higher nitrogen use efficiency at lower nitrogen rates application. *Field Crops Research* 175: 47–55.

Kendy, E., Molden, D.J., Steenhuis, T.S. et al. (2003). Policies Drain the North China Plain: Agricultural Policy and Ground-water Depletion in Luancheng County, 1949-2000. Colombo, Sri Lanka: International Water Management Institute.

Li, Y., Wang, L., Liu, S. et al. (2002). The influence of different amounts of water supplied at different depths in soil-root ointerface on root distribution and yield of winter wheat. *Acta Ecologica Sinica* 22 (10): 1680–1687.

Li, Q., Dong, B., Qiao, Y. et al. (2010). Root growth, available soil water, and water-use efficiency of winter wheat under different irrigation regimes applied at different growth stages in North China. *Agricultural Water Management* 97: 1676–1682.

Liu, Y. and Luo, Y. (2010). A consolidated evaluation of the FAO-56 dual crop coefficient approach using the lysimeter data in the North China Plain. *Agricultural Water Management* 97: 31–40.

Liu, T. and Luo, Y. (2011). Effects of shallow water tables on the water use and yield of winter wheat (*Triticum aestivum* L.) under rain-fed condition. *Australian Journal of Crop Science* 5: 1692–1697.

Liu, C. and Xia, J. (2004). Water problems and hydrological research in the Yellow River and the Huai and Hai River basins of China. *Hydrological Processes* 18: 2197–2210.

Liu, W., Wang, J., Wang, C. et al. (2018a). Root growth, water and nitrogen use efficiencies in winter wheat under different irrigation and nitrogen regimes in North China Plain. *Frontiers in Plant Science* 9: 1798–1798.

Liu, W., Ma, G., Wang, C. et al. (2018b). Irrigation and nitrogen regimes promote the use of soil water and nitrate nitrogen from deep soil layers by regulating root growth in wheat. *Frontiers in Plant Science* 9: 32–32.

Lv, G., Kang, Y., Li, L. et al. (2010). Effect of irrigation methods on root development and profile soil water uptake in winter wheat. *Irrigation Science* 28: 387–398.

Lv, G., Song, J., Bai, W. et al. (2015). Effects of different irrigation methods on micro-environments and root distribution in winter wheat fields. *Journal of Integrative Agriculture* 14: 1658–1672.

Man, J., Shi, Y., Yu, Z. et al. (2016). Root growth, soil water variation, and grain yield response of winter wheat to supplemental irrigation. *Plant Production Science* 19: 1–13.

Mo, X. and Liu, S. (2001). Simulating evapotranspiration and photosynthesis of winter wheat over the growing season. *Agricultural and Forest Meteorology* 109: 203–222.

Ouyang, Z. and Luo, Y. (2002). A conceptual model of predicting soil water storage of winter wheat root zone. *Progress in Geography* 21: 593–599.

Phene, C.J., Davis, K.R., Hutmacher, R.B. et al. (1991). Effect of high frequency surface and subsurface drip irrigation on root distribution of sweet corn. *Irrigation Science* 12: 135–140.

Piao, S., Philippe, C., Yao, H. et al. (2010). The impacts of climate change on water resources and agriculture in China. *Nature* 467: 43–51.

Plett, D.C., Ranathunge, K., Melino, V.J. et al. (2020). The intersection of nitrogen nutrition and water use in plants: new paths toward improved crop productivity. *Journal of Experimental Botany* 71: 4452–4468.

Proffitt, A.P.B., Berliner, P.R., and Oosterhuis, D.M. (1985). A comparative study of root distribution and water extraction efficiency by wheat grown under high- and low-frequency irrigation. *Agronomy Journal* 77: 655–662.

Qi, W., Liu, H., Liu, P. et al. (2012). Morphological and physiological characteristics of corn (Zea mays L.) roots from cultivars with different yield potentials. *European Journal of Agronomy* 38: 54–63.

Ren, B., Li, X., Dong, S. et al. (2018). Soil physical properties and maize root growth under different tillage systems in the North China Plain. *The Crop Journal* 6: 669–676.

Rey, D., Holman, I.P., and Knox, J.W. (2017). Developing drought resilience in irrigated agriculture in the face of increasing water scarcity. *Regional Environmental Change* 17: 1527–1540.

SCIO_PRC (2019). Food security in China. http://www.scio.gov.cn/zfbps/32832/Document/1666228/1666228.htm. (accessed July 2020).

Shao, L., Zhang, X., Chen, S. et al. (2009). Effects of irrigation frequency under limited irrigation on root water uptake, yield and water use efficiency of winter wheat. *Irrigation and Drainage* 58: 393–405.

Tu, C. and Li, F. (2017). Responses of greenhouse gas fluxes to experimental warming in wheat season under conventional tillage and no-tillage fields. *Journal of Environmental Sciences* 54: 314–327.

United Nations (2015) Transforming our world: the 2030 agenda for sustainable development. http://www.un.org/ga/search/view_doc.asp?symbol=A/RES/70/1&Lang=E. (accessed July 2015).

de Vries, F.T., Griffiths, R.I., Knight, C.G. et al. (2020). Harnessing rhizosphere microbiomes for drought-resilient crop production. *Science* 368: 270.

Wang, E., Yu, Q., Wu, D. et al. (2008). Climate, agricultural production and hydrological balance in the North China Plain. *International Journal of Climatology* 28: 1959–1970.

Wang, C., Liu, W., Li, Q. et al. (2014). Effects of different irrigation and nitrogen regimes on root growth and its correlation with above-ground plant parts in high-yielding wheat under field conditions. *Field Crops Research* 165: 138–149.

Wheeler, R.M., Wl, B., Mackowiak, C. et al. (1993). A data base of crop nutrient use, water use, and carbon dioxide exchange in a 2O square meter growth chamber: I. Wheat as a case study. *Journal of Plant Nutrition* 16 (10): 1881–1915.

Xu, C., Tao, H., Tian, B. et al. (2016). Limited-irrigation improves water use efficiency and soil reservoir capacity through regulating root and canopy growth of winter wheat. *Field Crops Research* 196: 268–275.

Zhang, X., Pei, D., and Chen, S. (2004b). Root growth and soil water utilization of winter wheat in the North China Plain. *Hydrological Processes* 18: 2275–2287.

Zhang, X., Chen, S., Sun, H. et al. (2008). Dry matter, harvest index, grain yield and water use efficiency as affected by water supply in winter wheat. *Irrigation Science* 27: 1–10.

Zhang, Y., Li, T., Bei, S. et al. (2018). Growth and distribution of maize roots in response to nitrogen accumulation in soil profiles after long-term fertilization management on a calcareous soil. *Sustainability* 10: 1–16.

Zhao, Y., Xue, Z., Guo, H. et al. (2014). Effects of tillage and crop residue management on soil respiration and its mechanism. *Transactions of the Chinese Society of Agricultural Engineering* 30: 155–165.

Zhao, X., Li, F., Ai, Z. et al. (2018). Stable isotope evidences for identifying crop water uptake in a typical winter wheat–summer maize rotation field in the North China Plain. *Science of The Total Environment* 618: 121–131.

Zhou, S., Wu, Y., Wang, Z. et al. (2008). The nitrate leached below maize root zone is available for deep-rooted wheat in winter wheat–summer maize rotation in the North China Plain. *Environmental Pollution* 152: 723–730.